Tente is a bollard for conventional use made from cast iron and stainless steel, which is able to resist the lateral impact of a vehicle and it is suitable for installation on aligned arrangement.

Steel | **19 cm** | **30 kg**

Update 27.05.2020

TENTE

Leopoldo Milá 1990

escofet

Origin

Its name comes from the Spanish word tentetieso, in reference to a doll with a counterweight at the base and which, when tilted in any direction, always retains its balance.

Material

The top and base are made from GG-20 grey cast iron with an oven-baked primer and polyester paint finish. The body is made from AISI 316L stainless steel pipe, painted or with a shiny AISI 316L polished finish. It has an internal calibrated galvanised steel threaded tensioner.

Installation

Tente is installed by means of an intermediate base plate with two M16 x 140 mm screws fixed with resin to holes with a diameter of 40 mm.

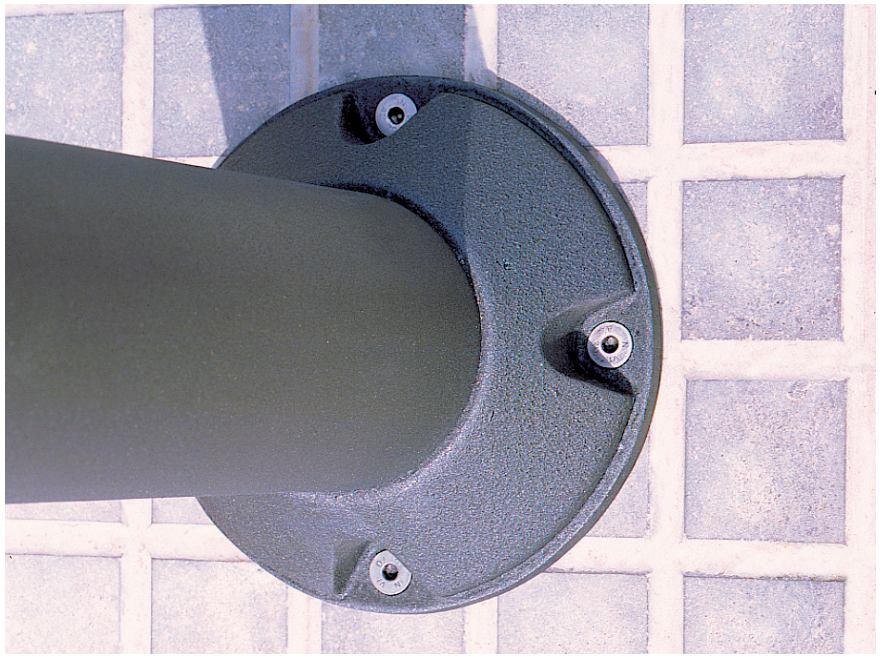

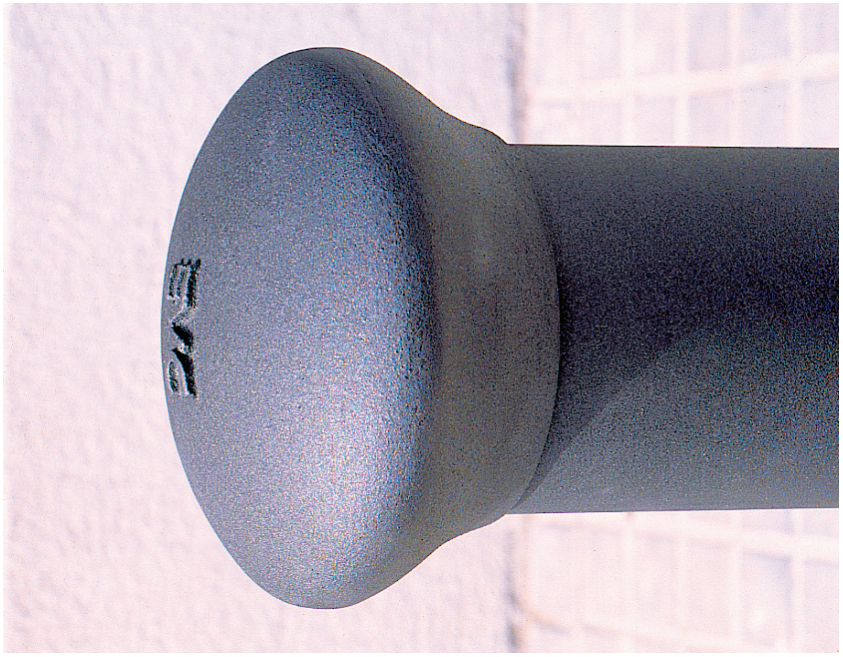

1. Pass marker

Tente			
Dimensions		Ø19 x 74 cm	
Weight		30 kg	
1.1 General features			
Head and base	Iron cast GG-20 pearlitic	**Fixing**	Embedded on pavement with a special base
Finsh	Forge Black or Textured Silver coated finish. Category of atmospheric corrosivity C5 according to UNE EN ISO 12944-2.		
Tube	Acero inox AISI 316L		
Finish	Polished shiny stainless / Forge Black coated finish. Category of atmospheric corrosivity C5 according to UNE EN ISO 12944-2.		
Colours			

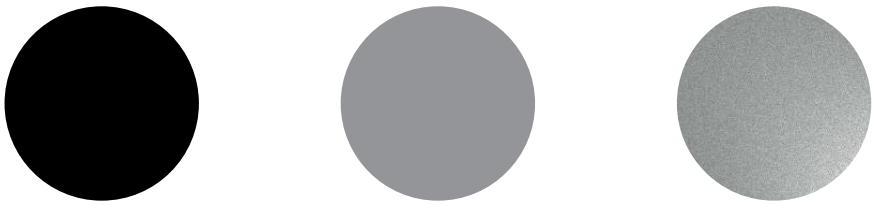

A. Forge Black steel **B.** Textured Silver steel **C.** Polished shiny stainless steel

1.2 Installation system

Hoisting
(W=30 kg)

Installation
Tightly screw the 2 stud bolts M16x140 mm. Drill pavement and fill with resin or fat morter. Center and caulk the bench foot all around. Fix with screws DIN 7991 M8x20mm.

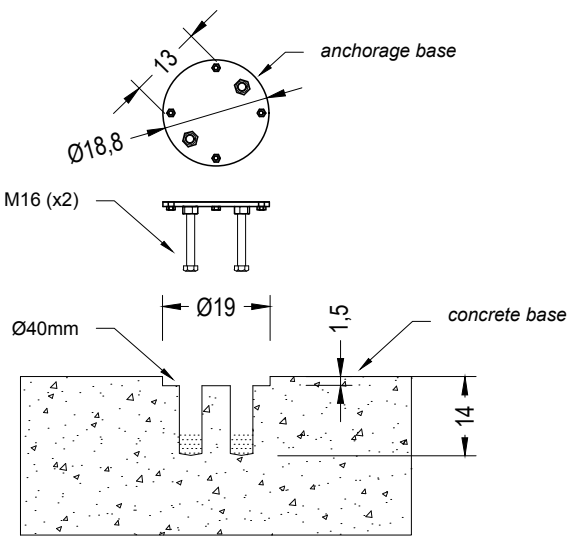

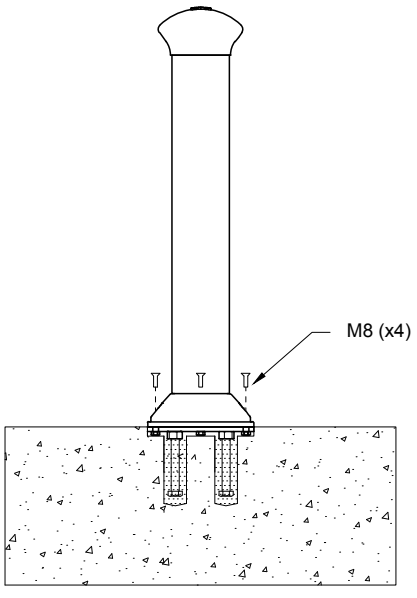

TENTE

Tente

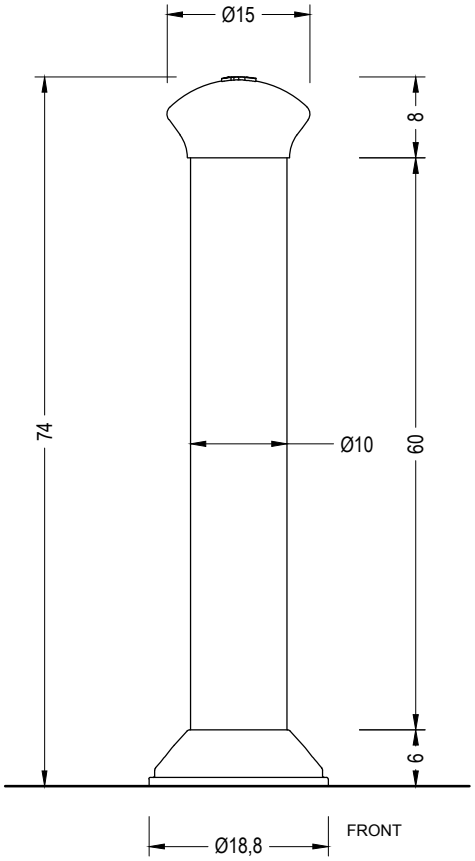
Ø15
8
74
Ø10
60
6
Ø18,8
FRONT

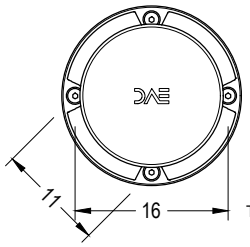
11
16
TOP

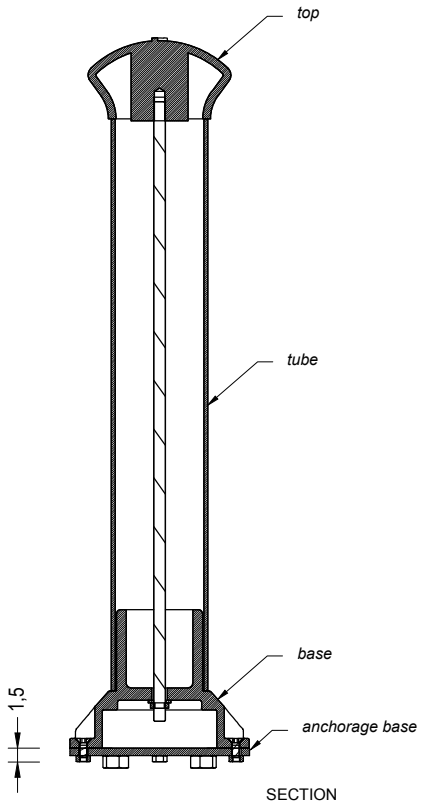
top
tube
base
anchorage base
1,5
SECTION

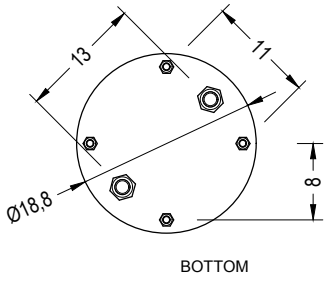
13
11
Ø18,8
8
BOTTOM

TENTE

The names, trademarks and industrial models of the products have been logged in the corresponding registers. The technical information provided by Escofet about its products can be modified without prior notice.

Escofet 1886 S.A
Head office and production

Montserrat, 162
E 08760 Martorell
Barcelona - España
T. 0034 937 737 150
F. 0034 937 737 151

info@escofet.com
www.escofet.com

AENOR Environmental Management ISO 14001 GA-2005/0072
AENOR Occupational Health&Safety OHSAS 18001 SST-0090/2010
AENOR Registered Company ISO 9001 ER-0403/2016
CERTIFIED IQNet MANAGEMENT SYSTEM

escofet®